Master Course Computer Networks IN2097

Prof. Dr.-Ing. Georg Carle
Christian Grothoff, Ph.D.

Chair for Network Architectures and Services
Institut für Informatik
Technische Universität München
http://www.net.in.tum.de

Outline

- Project
- Network virtualisation:
  Link virtualization: ATM, MPLS

Network Architectures

Link virtualization: ATM, MPLS

IP-Over-ATM

Issues:

- IP datagrams into ATM AAL5 PDUs
- from IP addresses to ATM addresses
  - just like IP addresses to 802.3 MAC addresses
  - ARP server

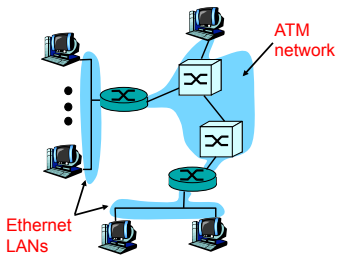

AAL 5 Protocol

- AAL5 is a simple and efficient AAL (SEAL) to perform a subset of the functions of AAL3/4
- The CPCS-PDU payload length can be up to 65,535 octets and must use PAD (0 to 47 octets) to align CPCS-PDU length to a multiple of 48 octets

PAD	Padding
CPCS-UU	CPCS User-to-User Indicator
CPI	Common Part Indicator
Length	CPCS-PDU Payload Length
CRC-32	Cyclic Redundancy Chuck

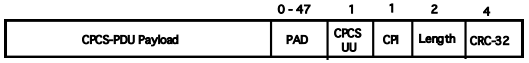

AAL 5 Layering

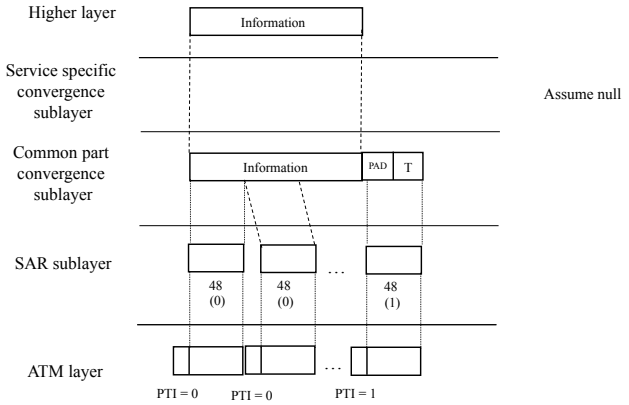

Classical IP and ARP over ATM (CLIP)

- Specification of a complete IP implementation for ATM
- Suitable for ATM unicast communication
- Encapsulation of IP packets into AAL PDUs
- Support for large MTU sizes
- There must be an ATMARP server in each LIS (Logical IP Subnet)

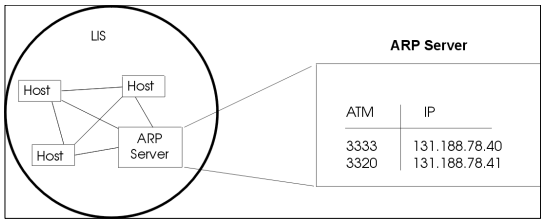

Classical IP and ARP over ATM (CLIP)

- The host registers its IP/ATM address information at the ATMARP server using the InARP protocol

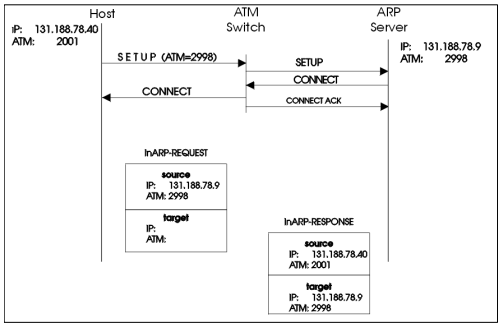

Classical IP and ARP over ATM (CLIP)

- RFC 1577: Classical IP and ARP over ATM
- ATMARP Server Operational Requirements
  - The ATMARP server, upon the completion of an ATM call/ connection of a new VC, will transmit an InATMARP request to determine the IP address of the client.
  - The InATMARP reply from the client contains the information necessary for the ATMARP Server to build its ATMARP table cache.
  - This information is used to generate replies to the ATMARP requests it receives.
- InATMARP is the same protocol as the original InARP protocol presented in RFC 1293 but applied to ATM networks: Discover the protocol address of a station associated with a virtual circuit.
- RFC 1293: Bradely, T., and C. Brown, "Inverse Address Resolution Protocol", January 1992.

Classical IP and ARP over ATM (CLIP)

- RFC 1577: Classical IP and ARP over ATM
- ATMARP Client Operational Requirements
  1. Initiate the VC connection to the ATMARP server for transmitting and receiving ATMARP and InATMARP packets.
  2. Respond to ARP_REQUEST and InARP_REQUEST packets received on any VC appropriately.
  3. Generate and transmit ARP_REQUEST packets to the ATMARP server and to process ARP_REPLY appropriately. ARP_REPLY packets should be used to build/refresh its own client ATMARP table entries.
  4. Generate and transmit InARP_REQUEST packets as needed and to process InARP_REPLY packets appropriately. InARP_REPLY packets should be used to build/refresh its own client ATMARP table entries.
  5. Provide an ATMARP table aging function to remove own old client ATMARP tables entries after a period of time.

Chair for Network Architectures and Services – Prof. Carle
Department for Computer Science
TU München

MPLS

Multi-Protocol Label Switching

Multiprotocol label switching (MPLS)

- Initial goal: speed up IP forwarding by using fixed length label (instead of IP address) to do forwarding
  - borrowing ideas from Virtual Circuit (VC) approach
  - IP datagram still keeps IP address
  - RFC 3032 defines MPLS header
    - Label: has role of Virtual Circuit Identifier
    - Exp: experimental usage, may specify Class of Service (CoS)
    - S: Bottom of Stack - end of series of stacked headers
    - TTL: time to live

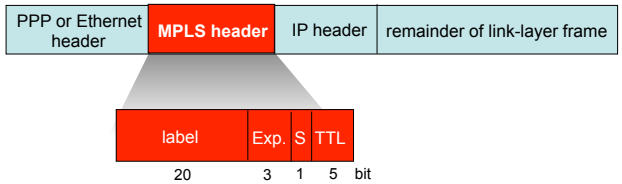

MPLS capable routers

- a.k.a. label-switched router
- forwards packets to outgoing interface based only on label value (don't inspect IP address)
  - MPLS forwarding table distinct from IP forwarding tables
- signaling protocol needed to set up forwarding
  - Label Distribution Protocol LDP (RFC 3036 → obsoleted by RFC 5036)
  - RSVP-TE (RFC 3209 → updated by RFCs 3936, 4420, 4874, 5151, 5420, 5711)
- forwarding possible along paths that IP alone would not allow (e.g., source-specific routing)
- MPLS supports traffic engineering
- must co-exist with IP-only routers

MPLS forwarding tables

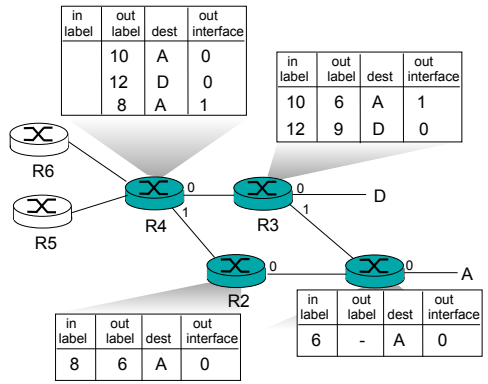

in label	out label	dest	out interface
	10	A	0
	12	D	0
	8	A	1

in label	out label	dest	out interface
10	6	A	1
12	9	D	0

in label	out label	dest	out interface
8	6	A	0

in label	out label	dest	out interface
6	-	A	0

MPLS

- Label Switched Path (LSP)
  - set up by signalling protocol
  - has sequence of labels
- Forwarding Equivalence Class (FEC)
  - specification of packets treated the same way by a router
  - forwarded over same LSP
  - can be specified by destination prefix, e.g. FEC 10.1.1.0/24
- Label Switching Router
  - MPLS-capable IP router; may bind labels to FEC
- MPLS node
  - does not need IP stack
- stacked labels
  - label push; label pop

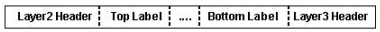

Benefits of MPLS

- High Speed Switching
  - facilitates construction of nodes with wire-line speed
- Simplifying packet forwarding
  - Routing decision can be limited to edge of AS
- Traffic Engineering
  - MPLS may control paths taken by different flows, e.g. to avoid congestion points for certain flows
- Quality of Service (QoS) support
  - resources may be specified for specific flows, isolation among flows
- Network scalability
  - label stacking allows to arrange MPLS domains in a hierarchy
- Supporting VPNs
  - tunneling of packets from an ingress point to an egress point

Forwarding Equivalence Class Routing

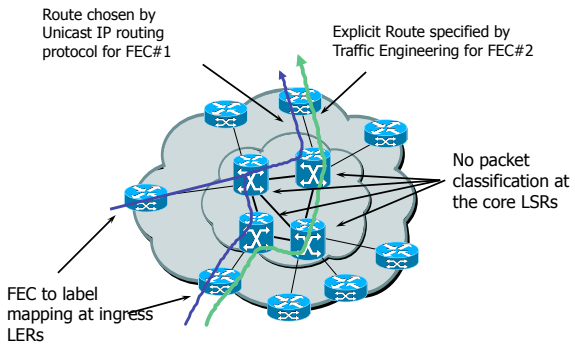

MPLS Flexibility

Label semantics

- Fine or coarse grained
- Unicast or multicast
- Explicit or implicit route
- VPN identifier

⇨ Loose semantics create flexible control

Traffic Engineering

- Traffic engineering: process of mapping traffic demand onto a network

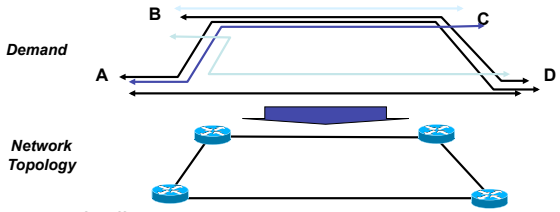

- Purpose of traffic engineering:
  - Maximize utilization of links and nodes throughout the network
  - Engineer links to achieve required delay, grade-of-service
  - Spread network traffic across network links, reduce impact of failure
  - Ensure available spare link capacity for re-routing traffic on failure
  - Meet policy requirements imposed by the network operator

⇨ Traffic engineering key to optimizing cost/performance

Chair for Network Architectures and Services – Prof. Carle
Department for Computer Science
TU München

Virtual Private Networks

Technische Universität München

Virtual Private Networks (VPN)

VPNs

Networks perceived as being private networks by customers using them, but built over shared infrastructure owned by service provider (SP)

- Service provider infrastructure:
  - backbone
  - provider edge devices
- Customer:
  - customer edge devices (communicating over shared backbone)

VPN Reference Architecture

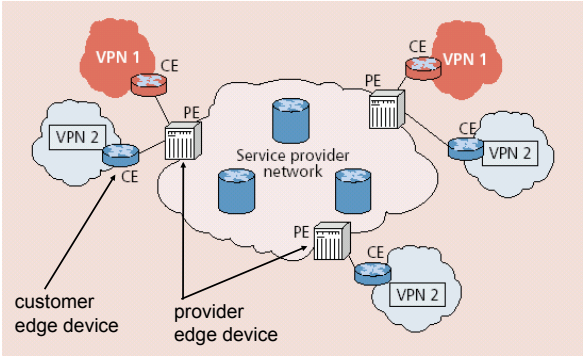

VPNs: Why?

- Privacy
- Security
- Works well with mobility (looks like you are always at home)
- Cost
  - many forms of newer VPNs are cheaper than leased line VPNs
  - ability to share at lower layers even though logically separate means lower cost
  - exploit multiple paths, redundancy, fault-recovery in lower layers
  - need isolation mechanisms to ensure resources shared appropriately
- Abstraction and manageability
  - all machines with addresses that are "in" are trusted no matter where they are

VPN: logical view

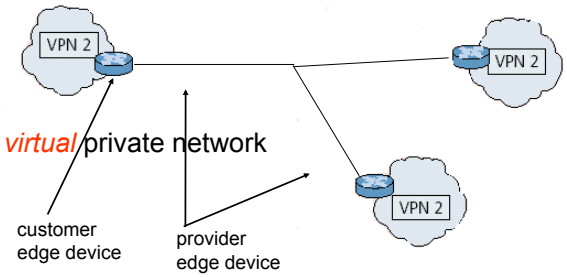

Leased-Line VPN

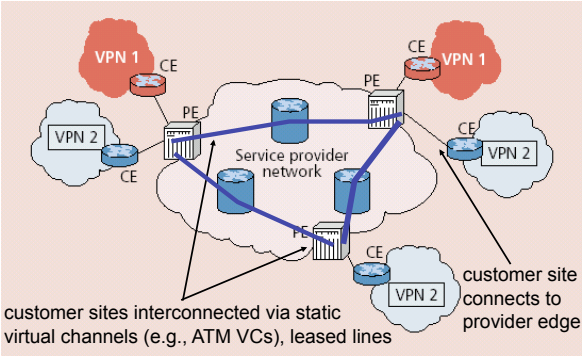

Customer Premise VPN

- all VPN functions implemented by customer

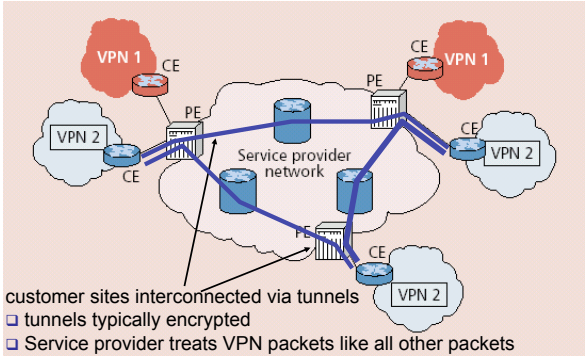

Variants of VPNs

- Leased-line VPN
  - configuration costs and maintenance by service provider: long time to set up, manpower
- CPE-based VPN
  - expertise by customer to acquire, configure, manage VPN
- Network-based VPN
  - Customer routers connect to service provider routers
  - Service provider routers maintain separate (independent) IP contexts for each VPN
    - sites can use private addressing
    - traffic from one VPN cannot be injected into another

Network-based Layer 3 VPNs

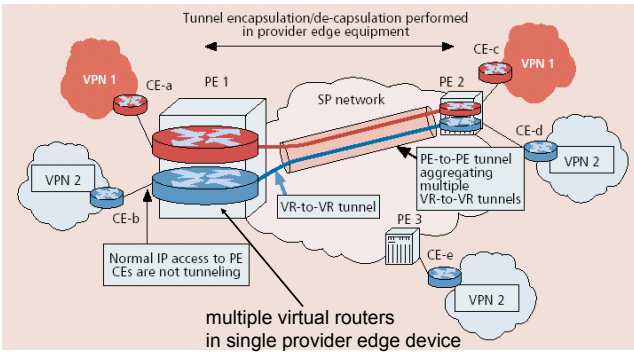

Tunneling

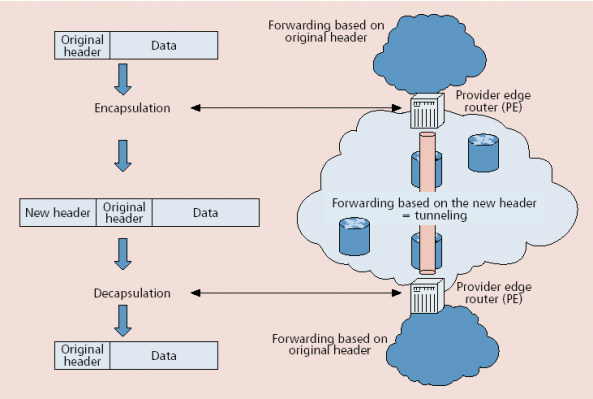

MPLS-based VPN